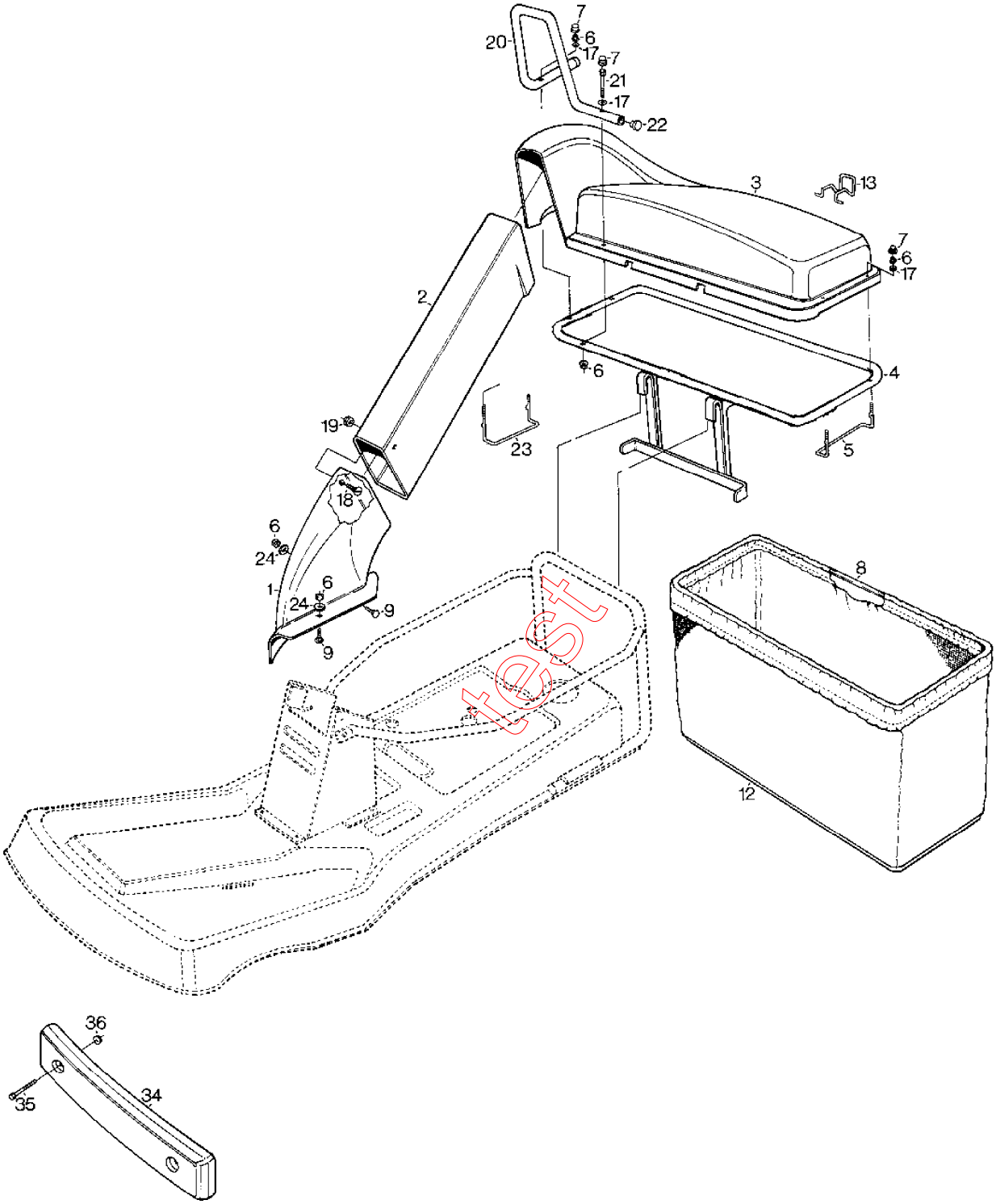

test

STIGA
404B
SPARE PARTS

Section: SCOOP - GARDEN GRASS COLLECTOR FRONT WEIGHT

Pos.	Quantity 2023	Quantity 2326 2328	Spare part No	Description	Kit	Notes	New
1	1	1	1134-3299-01	Grass funnel			
2	1	1	1134-3298-01	Grass ejection tube			
3	1	1	1134-3747-01	Cover			
4	1	1	1134-3220-02	Mounting frame			
5	2	1	1134-3232-01	Bag holder			
6	4	7	9747-0831-02	Lock nut			
7		5	9403-0113-00	Nut cap			
8	1	1	1134-3236-01	Bag frame			
9	2	2	9898-0820-16	Screw			
12	1	1	1134-3227-02	Grass bag			
13	1	1	1134-3201-01	Bagger latch			
17	4	5	9699-0090-02	Flat washer			
18	2	2	1134-3301-01	Carriage bolt			
19	2	2	9747-0631-02	Lock nut			
20		1	1134-3337-01	Tubular frame			
21		1	9997-0855-12	Screw			
22		2	9403-0043-70	Plug			
23		1	1134-3336-01	Wire clamp			
24	2	2	9699-0056-02	Flat washer			
34	1	1	..13-1912-11	Front weight assy		Tillbehör/accessory	
35	2	2	9997-0860-16	.Screw			
36	2	2	9739-0831-22	.Nut			

test